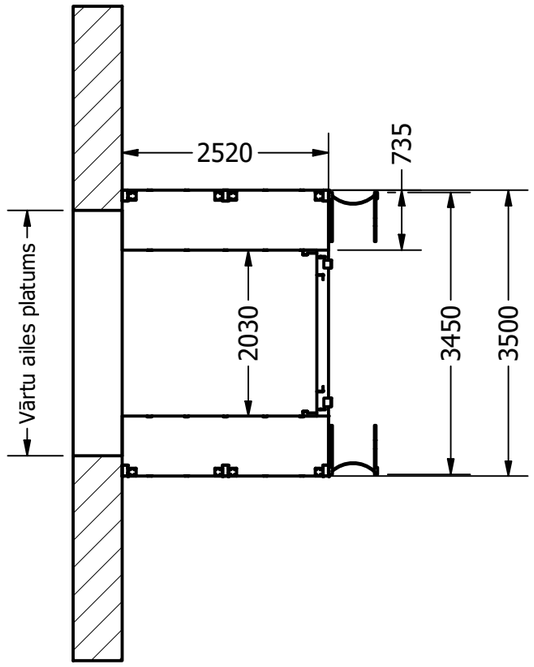

SECTION D-D
SCALE 1 / 75

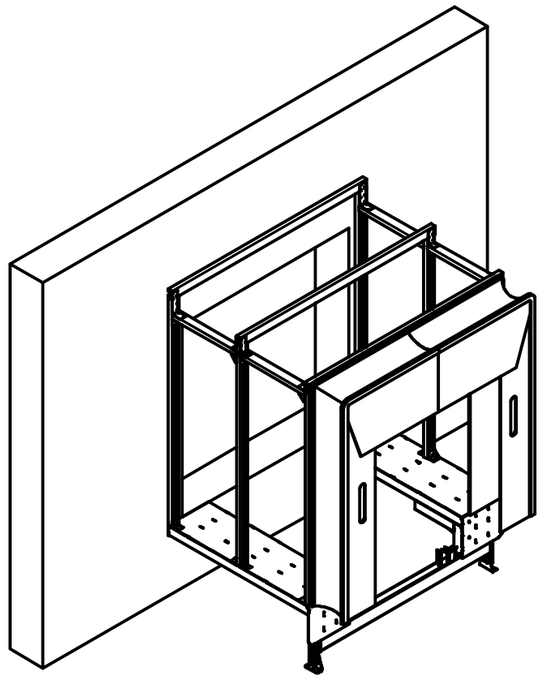

Pamatu plāns

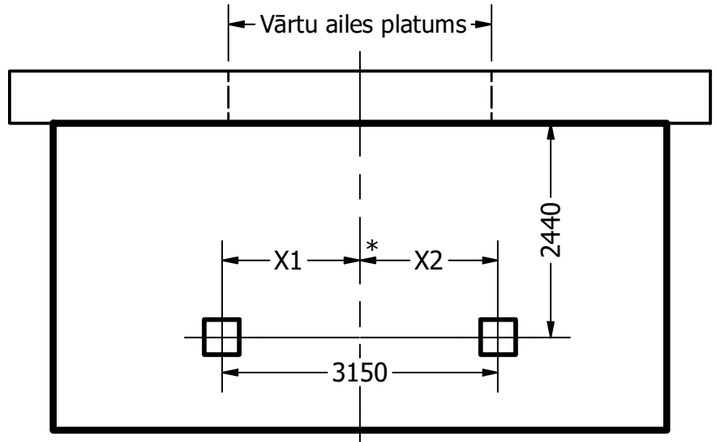

* abās pusēs vienāds attālums no vārtu centra

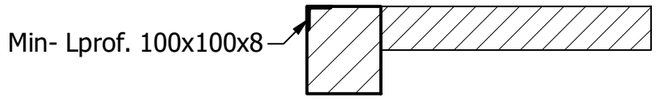

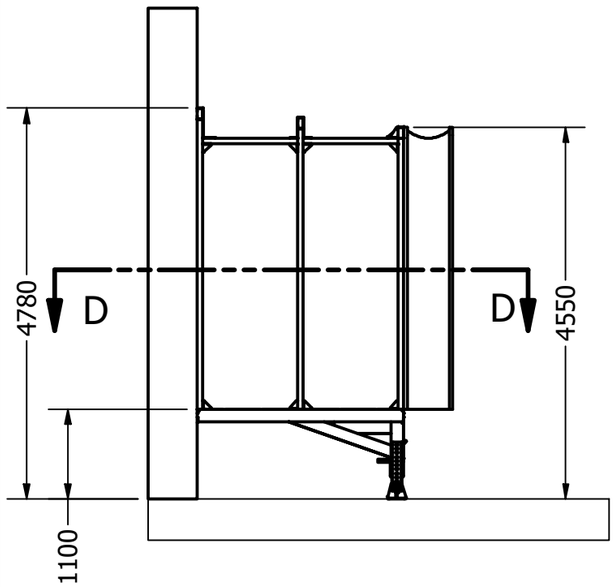

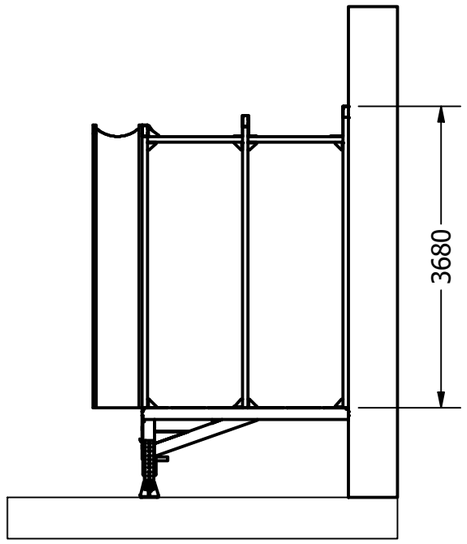

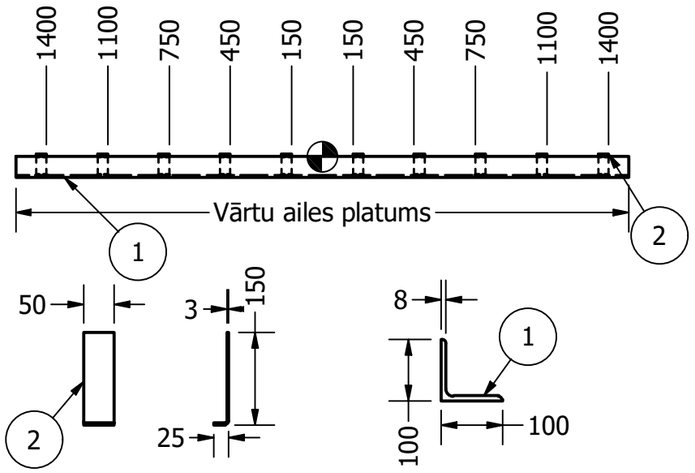

Riga Door Systems
we open the world
Malas, Vetras, Marupe LV-2167, Riga district, Latvia; web: www.rigadoors.lv

	Date	Name
Drawn	2024-04-26	VPA
Approved		

Rev.	Changes	Date	Name

Weight: N/A
Material:
Description: Doku māja 90
Drawing Nr.: DHH.90.4550.LV
Rev.: R0
A3
Project
Scale: DO NOT SCALE